Vectorworks Educational Version

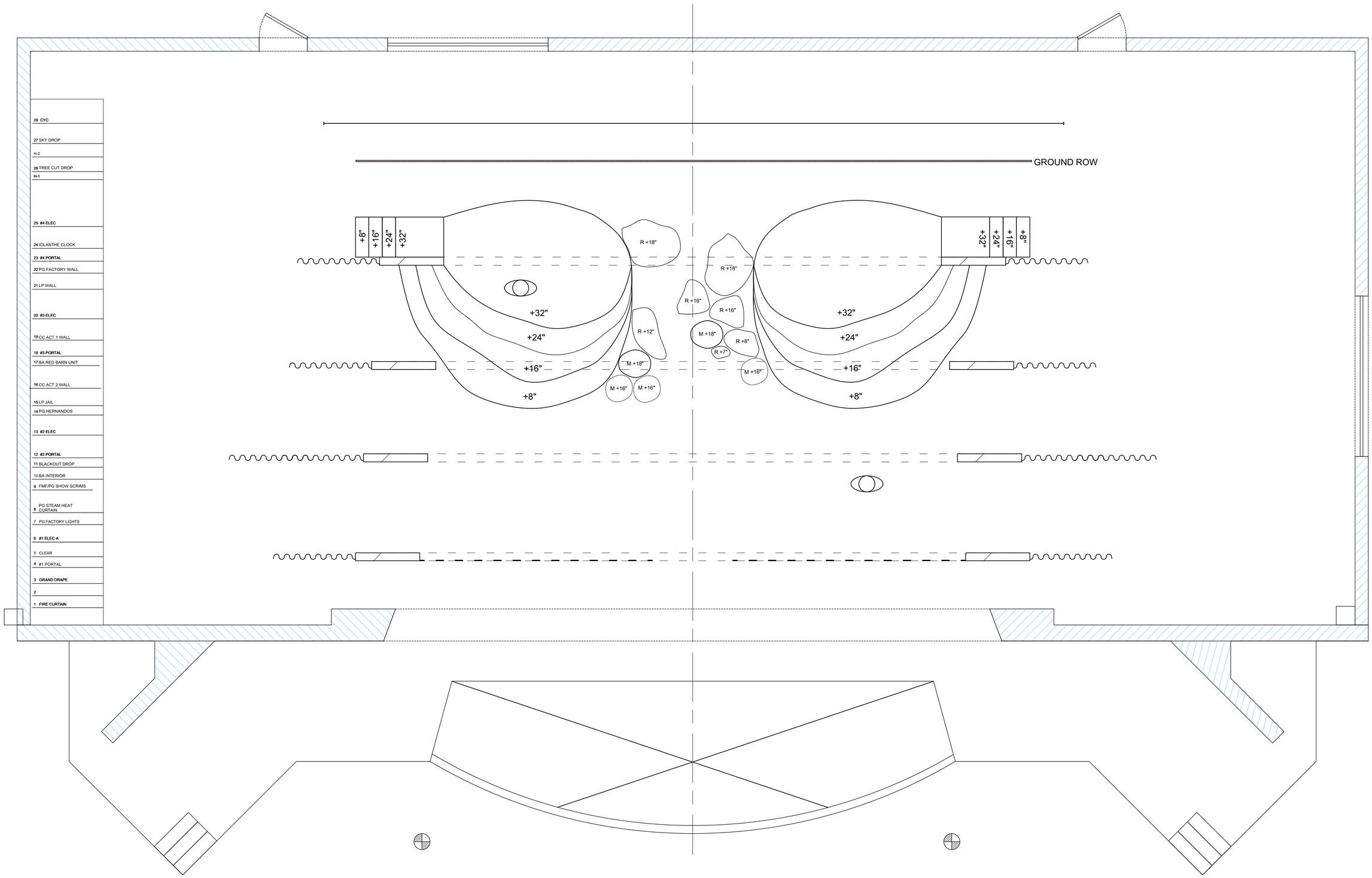

These drawings represent visual concept,and construction suggestions only. The designer is not an engineer and is not qualified to determine the structural appropriates of these designs. Contractors and suppliers are liable in that all work be accomplished in a workman like manner with attention to the most stringent applicable safety and fire codes. Any alterations must be approved by the designer prior to the commencement of construction.

AMERICA'S PREMIER LYRIC THEATER FESTIVAL
THE OHIO LIGHT OPERA

Freedlander Theatre

Iolanthe

DIRECTOR: Ted Christopher
DESIGNER: Kimberly Powers
DRAWN BY: Brandon M. Newton

SCALE: 1/4" - 1'-0"

SUBJECT: Act 1 Groundplan

SHEET #: GP-1 OF 1

DATE: 06/06/2018

Vectorworks Educational Version

Vectorworks Educational Version

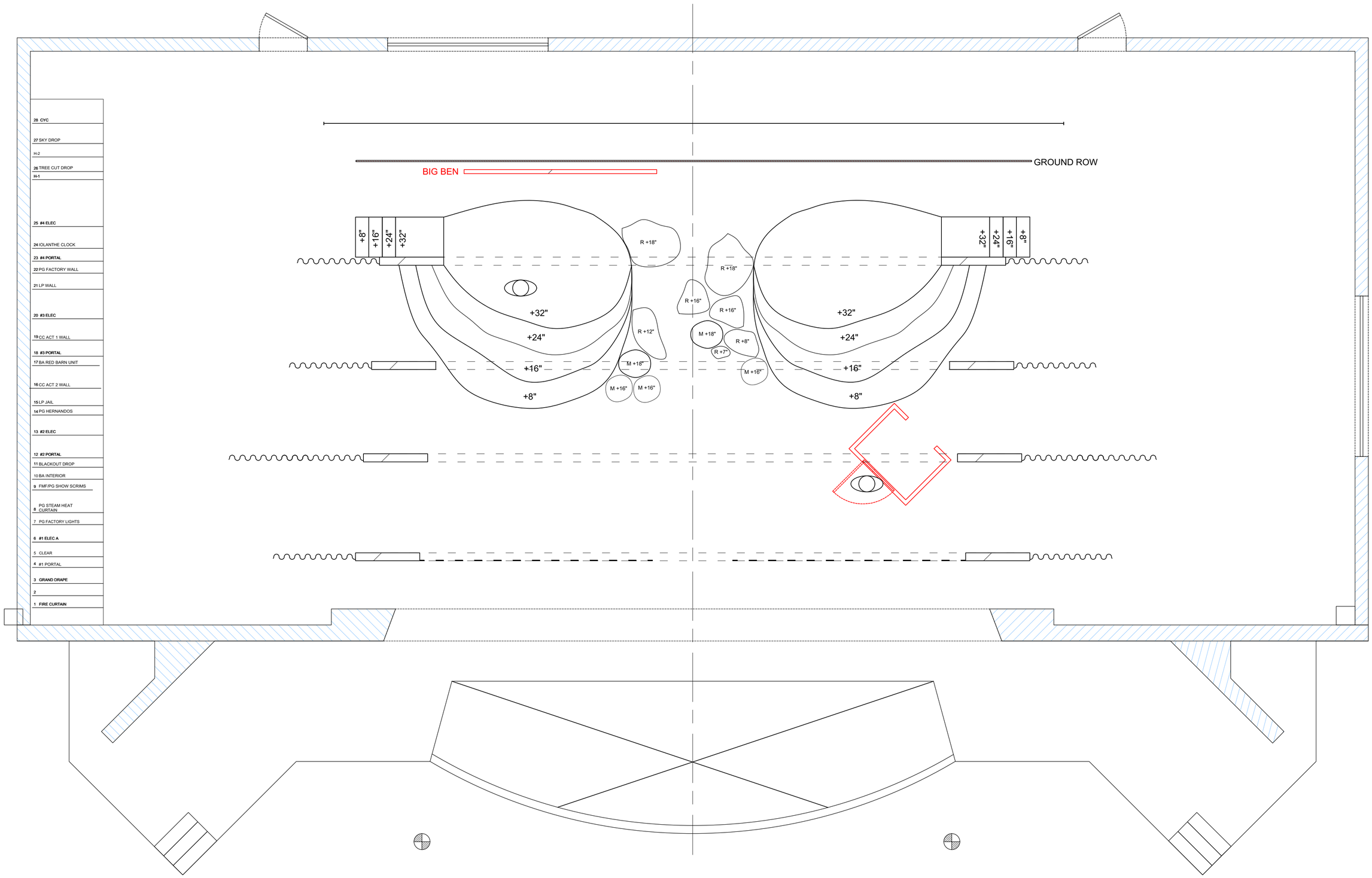

These drawings represent visual concept,and construction suggestions only. The designer is not an engineer and is not qualified to determine the structural appropriates of these designs. Contractors and suppliers are liable in that all work be accomplished in a workman like manner with attention to the most stringent applicable safety and fire codes. Any alterations must be approved by the designer prior to the commencement of construction.

AMERICA'S PREMIER LYRIC THEATER FESTIVAL
THE OHIO LIGHT OPERA

Freedlander Theatre

Iolanthe

DIRECTOR: Ted Christopher
DESIGNER: Kimberly Powers
DRAWN BY: Brandon M. Newton

SCALE: 1/4" - 1'-0"

SUBJECT: Act 1 Groundplan

SHEET #: GP-2 OF 2

DATE: 06/06/2018

Vectorworks Educational Version

Vectorworks Educational Version

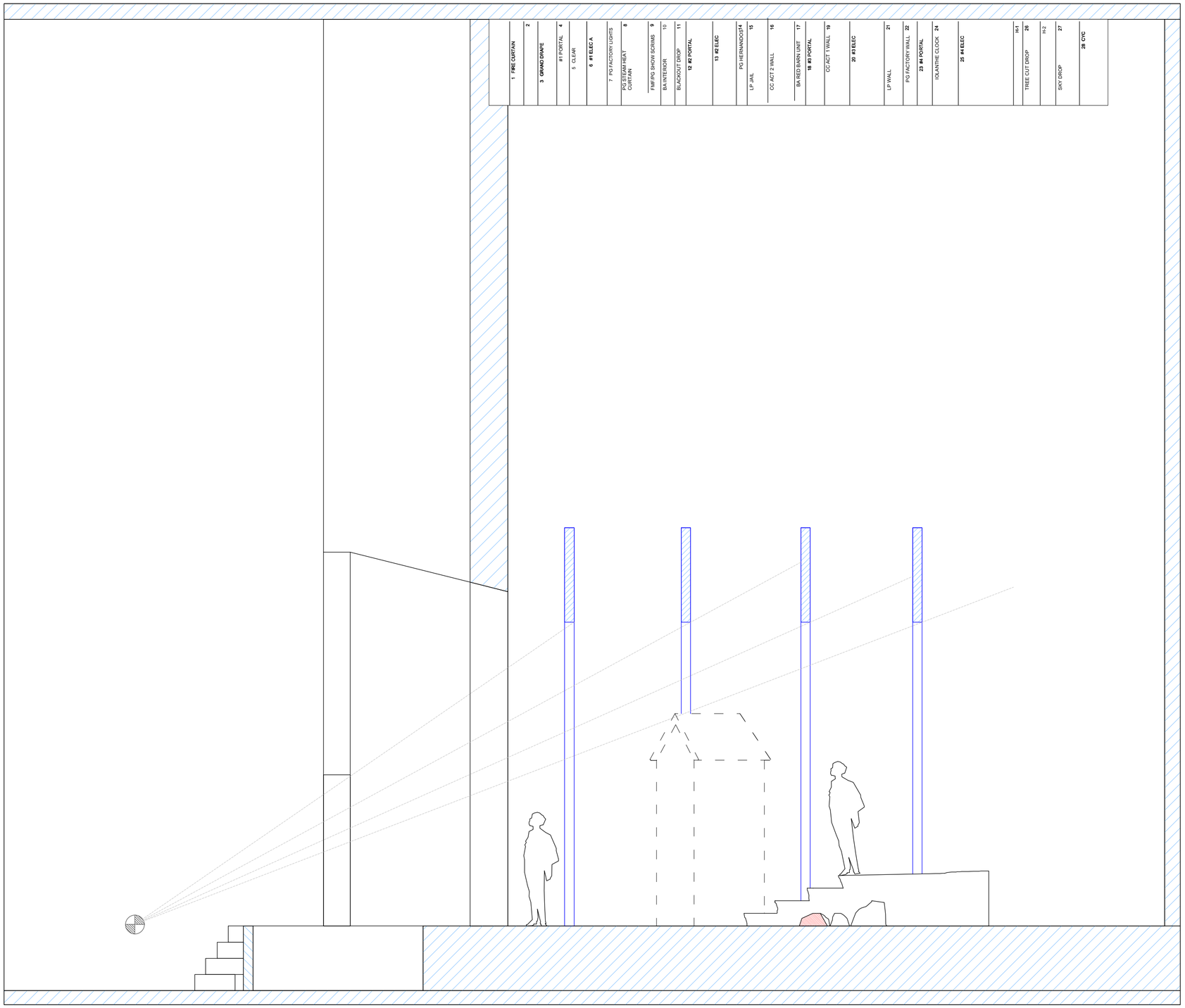

These drawings represent visual concept,and construction suggestions only. The designer is not an engineer and is not qualified to determine the structural appropriates of these designs. Contractors and suppliers are liable in that all work be accomplished in a workman like manner with attention to the most stringent applicable safety and fire codes. Any alterations must be approved by the designer prior to the commencement of construction.

AMERICA'S PREMIER LYRIC THEATER FESTIVAL
THE OHIO LIGHT OPERA

Freedlander Theatre

Iolanthe

DIRECTOR: Ted Christopher
DESIGNER: Kimberly Powers
DRAWN BY: Brandon M. Newton

SCALE: 1/4" - 1'-0"

SUBJECT: Centerline Section

SHEET #: Sec-1 OF 1

DATE: 06/06/2018

Vectorworks Educational Version

Vectorworks Educational Version

PLATFORMS

- TOPOGRAPHICAL VARIATION IS DONE WITH CARPET FOAM
- ARROWS POINT FROM HIGHER TO LOWER LEVELS
- PLATFORMS TOPPED IN SHAG CARPET OR ASTROTRUF (TBD BY BUDGET)
- FACING OF LEVELS IS COVERED IN 1" FOAM FOR CARVING ROCKS
- ORGANIC VARIATION IN FOAM CARVING DESIRED

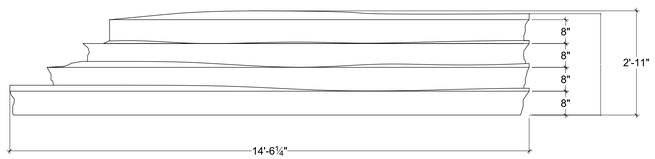

SR PLATFORM FRONT VIEW
(MIRROR SL PLATFORM)

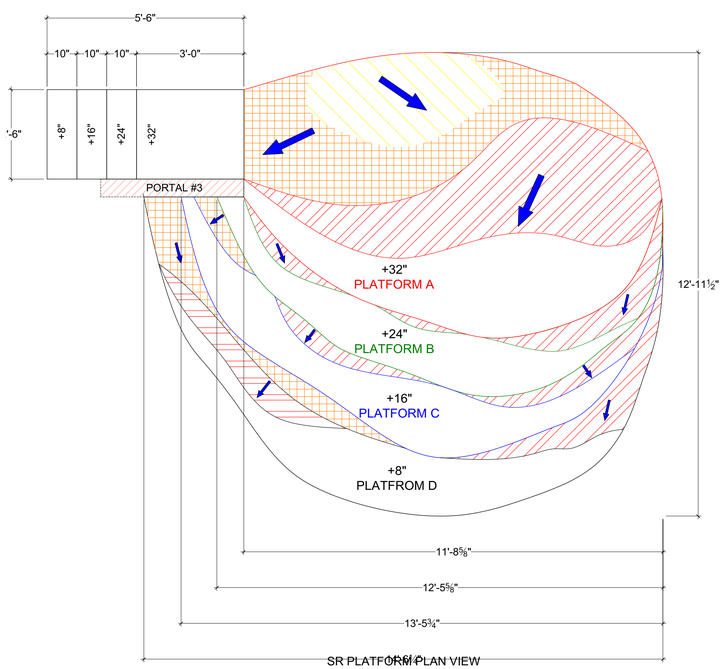

SR PLATFORM PLAN VIEW

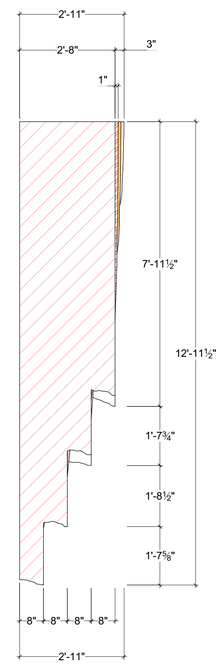

SR PLATFORM SECTION A
(CARVING IS TYPICAL OF ANY SECTION)

TOPOGRAPHICAL MAP LEGEND

+1" LEVEL

+2" LEVEL

+3" LEVEL

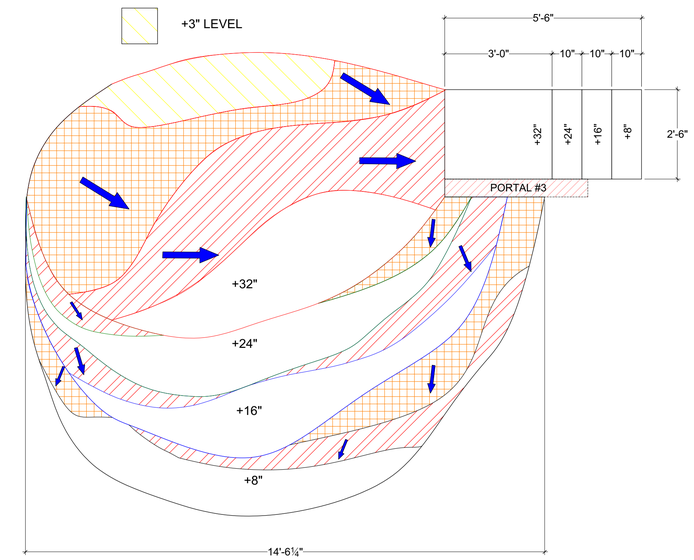

SL PLATFORM PLAN VIEW

These drawings represent visual concept,and construction suggestions only. The designer is not an engineer and is not qualified to determine the structural appropriates of these designs. Contractors and suppliers are liable in that all work be accomplished in a workman like manner with attention to the most stringent applicable safety and fire codes. Any alterations must be approved by the designer prior to the commencement of construction.

AMERICA'S PREMIER LYRIC THEATER FESTIVAL
THE OHIO LIGHT OPERA

Freedlander Theatre

Iolanthe

DIRECTOR: Ted Christopher
DESIGNER: Kimberly Powers
DRAWN BY: Brandon M. Newton

SCALE: 1/2" - 1'-0"

SUBJECT: Detail - Platforms

SHEET #:

Det-1

OF 1

DATE: 06/06/2018

Vectorworks Educational Version

Vectorworks Educational Version

GROUND ROW TOP VIEW

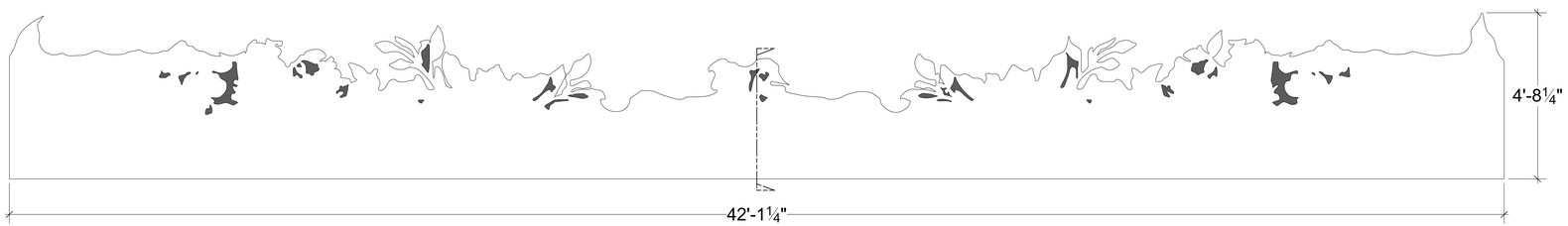

GROUND ROW FRONT VIEW

GROUND ROW CL SECTION

GROUND ROW

- GRAY SHAPES NEED TO BE CUT OUT
- EXACT FRAMING AND VERTICAL SUPPORT TBD BY TD

These drawings represent visual concept,and construction suggestions only. The designer is not an engineer and is not qualified to determine the structural appropriates of these designs. Contractors and suppliers are liable in that all work be accomplished in a workman like manner with attention to the most stringent applicable safety and fire codes. Any alterations must be approved by the designer prior to the commencement of construction.

AMERICA'S PREMIER LYRIC THEATER FESTIVAL
THE OHIO LIGHT OPERA

Freedlander Theatre

Iolanthe

DIRECTOR: Ted Christopher
DESIGNER: Kimberly Powers
DRAWN BY: Brandon M. Newton

SCALE: 1/4" - 1'-0"

SUBJECT: Detail - Ground Row

SHEET #: Det-2 OF 2

DATE: 06/06/2018

Vectorworks Educational Version

Vectorworks Educational Version

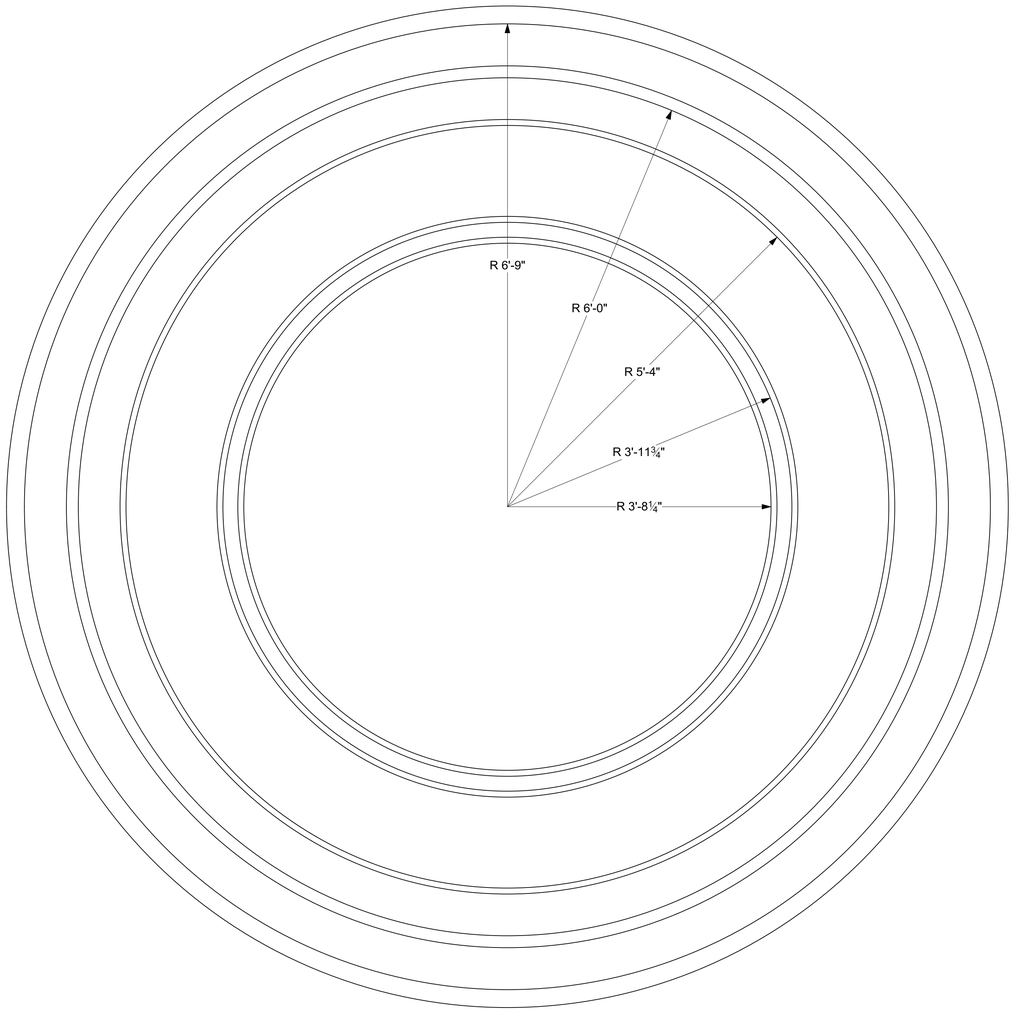

BIG BEN FRONT VIEW
RINGS ONLY

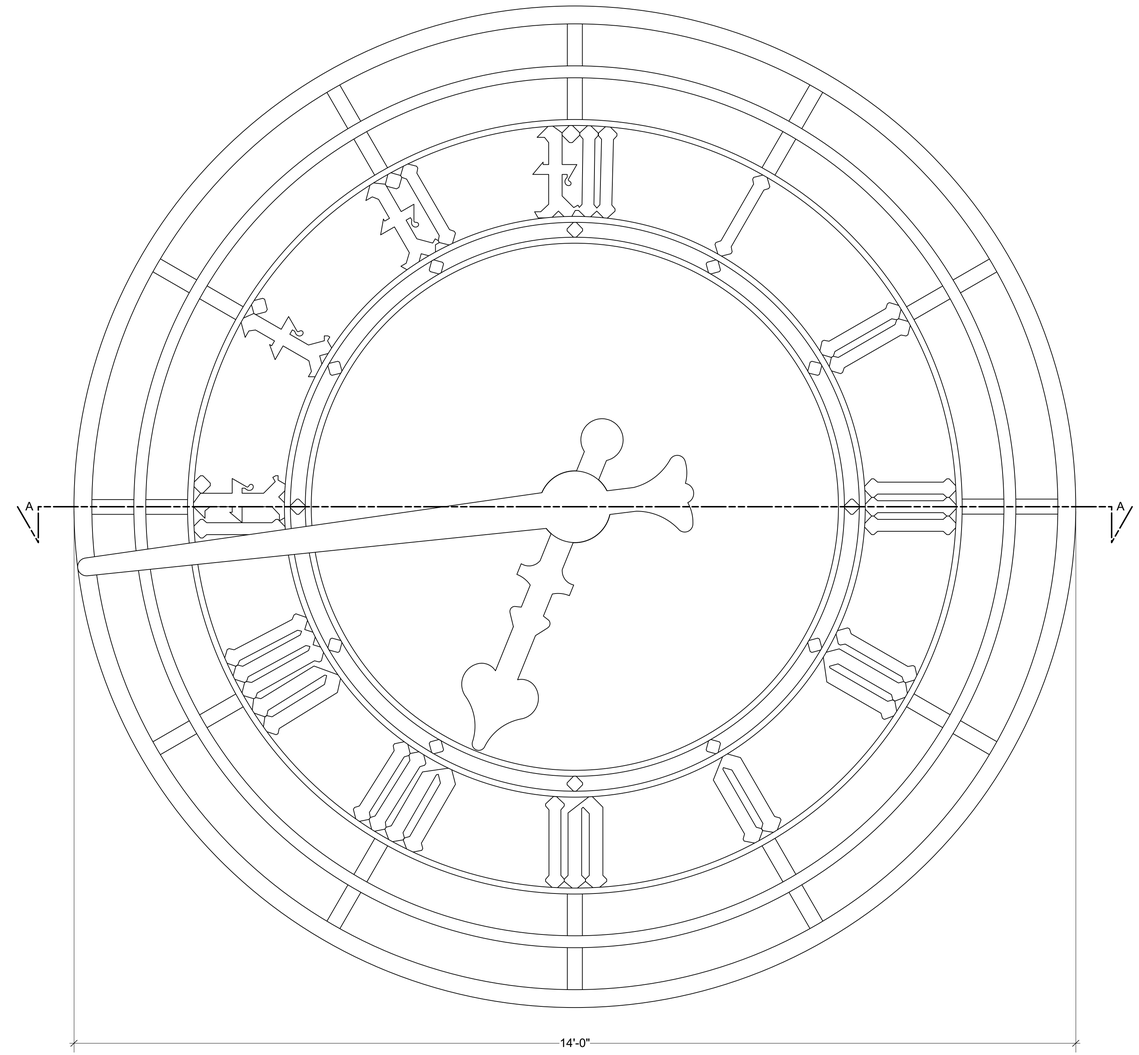

BIG BEN FRONT VIEW

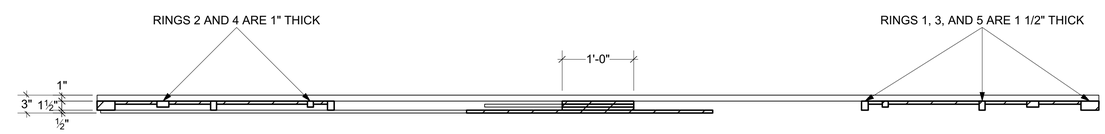

BIG BEN SECTION A

BIG BEN

- STRUCTURE IS BROADWAY FLAT STYLE WITH FOAM RELIEF
- NUMBERS, SPOKES, AND DIAMONDS ARE 1/2" THICK
- RINGS 1, 3, AND 5, ARE 1 1/2" THICK
- RING 2 AND 4 ARE 1" THICK
- IF MORE SUPPORT IS NEEDED FOR THE SMALLER ARM, PUT IT UNDER THE ARROW HEAD
- EXACT RIGGING TBD BY TD/ATD
- SEE PLATE DET-4 FOR FULL SCALE NUMBERS
- SEE PLATE DET-5 FOR FULL SCALE ARMS

These drawings represent visual concept,and construction suggestions only. The designer is not an engineer and is not qualified to determine the structural appropriates of these designs. Contractors and suppliers are liable in that all work be accomplished in a workman like manner with attention to the most stringent applicable safety and fire codes. Any alterations must be approved by the designer prior to the commencement of construction.

AMERICA'S PREMIER LYRIC THEATER FESTIVAL
THE OHIO LIGHT OPERA

Freedlander Theatre

Iolanthe

DIRECTOR: Ted Christopher
DESIGNER: Kimberly Powers
DRAWN BY: Brandon M. Newton

SCALE: 1/4" - 1'-0"

SUBJECT: Detail - Big Ben

SHEET #: Det-3 OF 8

DATE: 06/06/2018

Vectorworks Educational Version

Vectorworks Educational Version

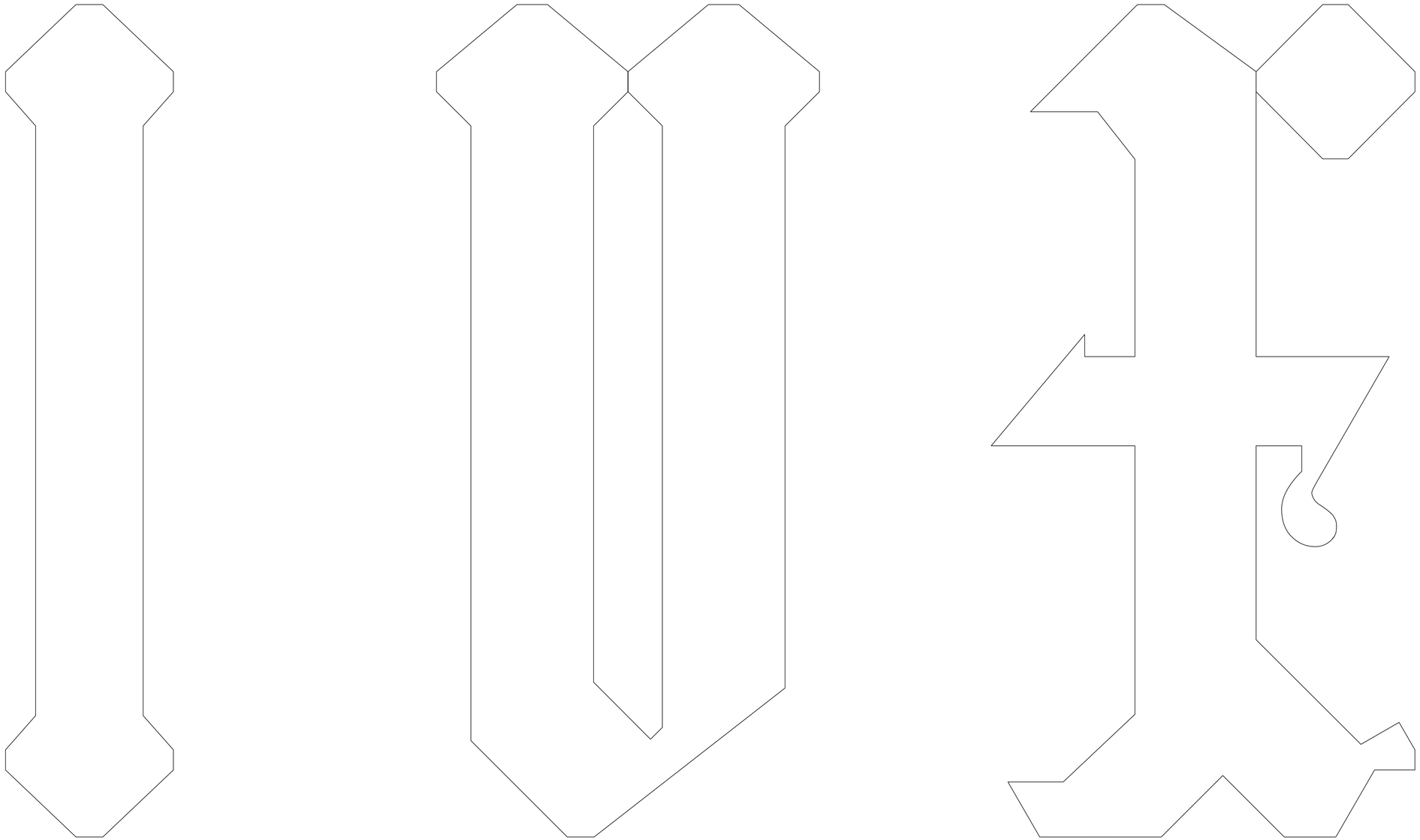

These drawings represent visual concept,and construction suggestions only. The designer is not an engineer and is not qualified to determine the structural appropriates of these designs. Contractors and suppliers are liable in that all work be accomplished in a workman like manner with attention to the most stringent applicable safety and fire codes. Any alterations must be approved by the designer prior to the commencement of construction.

AMERICA'S PREMIER LYRIC THEATER FESTIVAL
THE OHIO LIGHT OPERA

Freedlander Theatre

Iolanthe

SHEET #:

DIRECTOR: Ted Christopher
DESIGNER: Kimberly Powers
DRAWN BY: Brandon M. Newton

Det-4

SCALE: Full Scale

OF 4

SUBJECT: Full Scale Big Ben Numbers

DATE: 06/13/2018

Vectorworks Educational Version

Vectorworks Educational Version

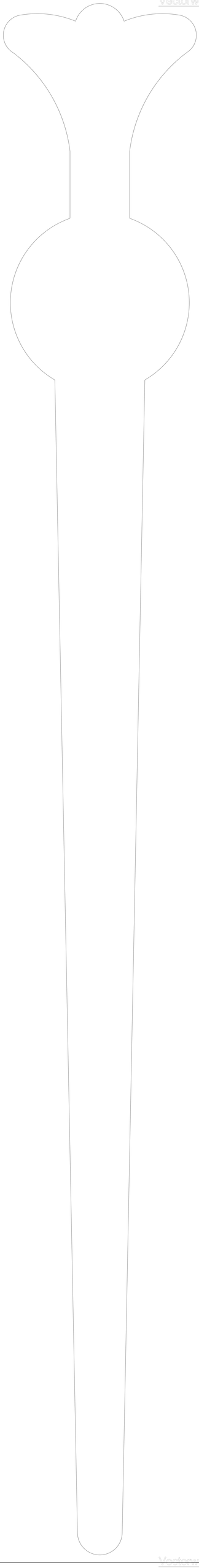

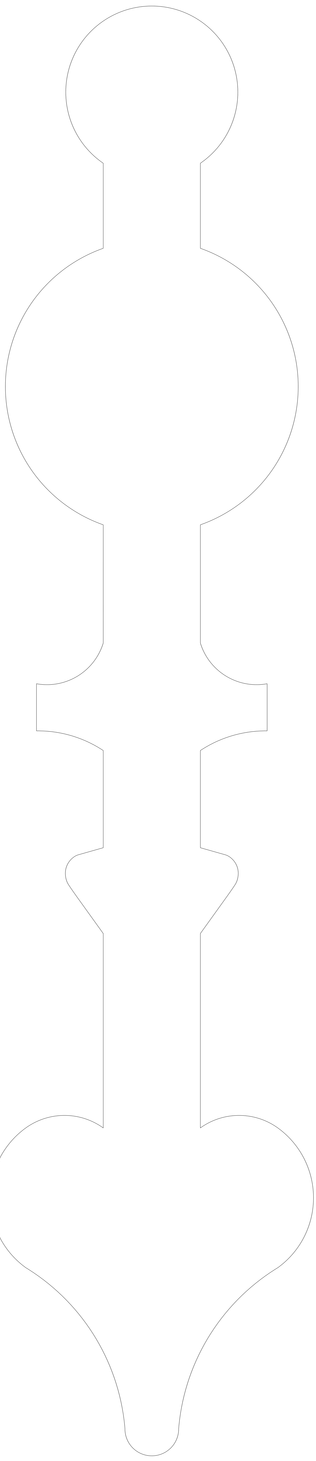

These drawings represent visual accurate and construction suggestions only. The designer is not a engineer and is not qualified to determine the structural integrity of the design. The contractor and engineer are liable to that all work is to be performed in accordance with all applicable codes, attention to the most stringent applicable safety and structural codes is required and must be verified by the designer prior to the commencement of construction.

AMERICA'S PREMIER LYRIC THEATER FESTIVAL

THE OHIO LIGHT OPERA

Freedlander Theatre

Islanthe

DIRECTOR: Ned Christopher

DESIGNER: Kimberly Powers

DRAWN BY: Brandon M. Newton

SCALE: Full Scale

DRAWING: Full Scale Big Ben Arms

SHEET #

Det-5

OF 8

DATE: 06/12/2018

Vectorworks Educational Version

Vectorworks Educational Version

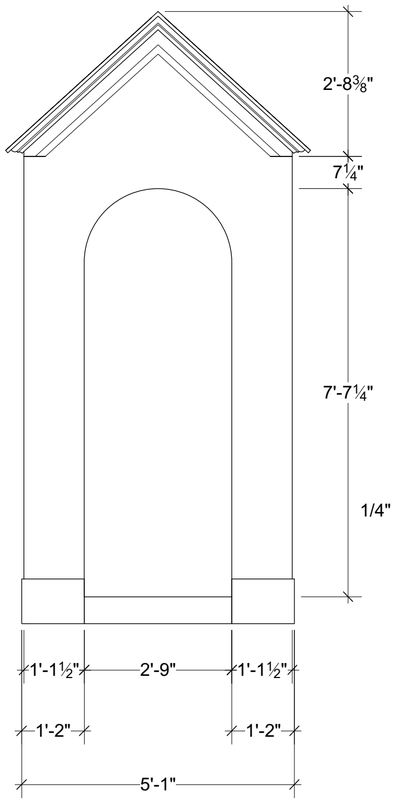

GUARD SHACK BACK VIEW

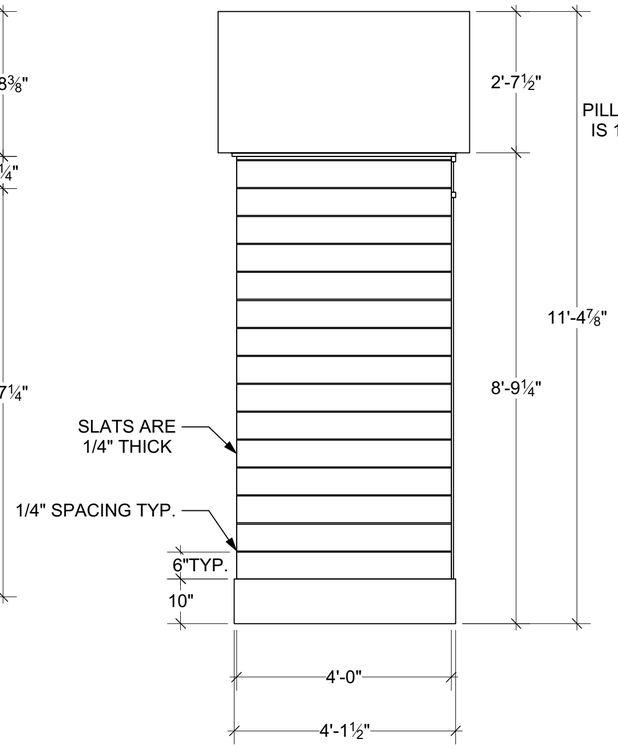

GUARD SHACK SIDE VIEW

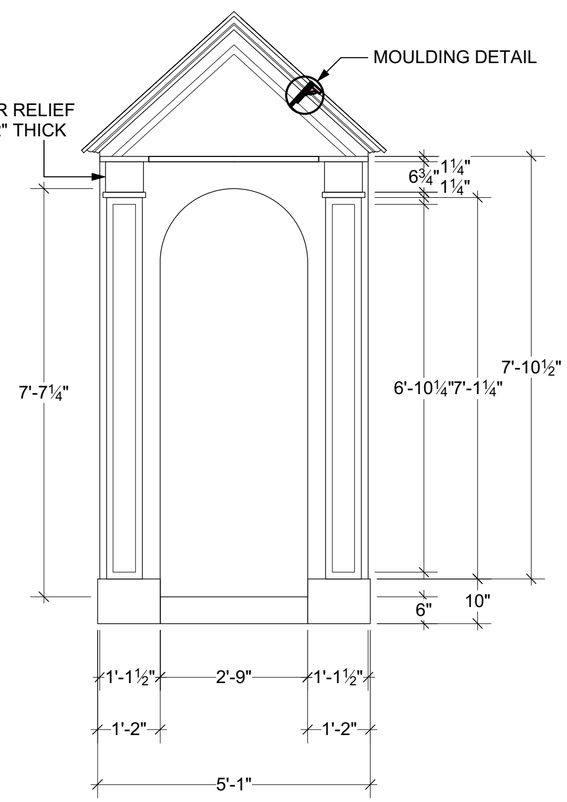

GUARD SHACK FRONT VIEW

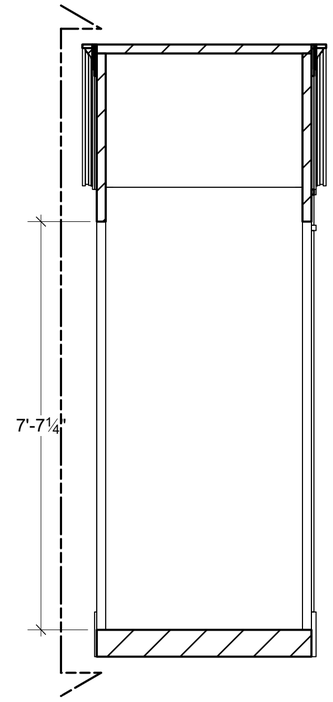

GUARD SHACK CL SECTION

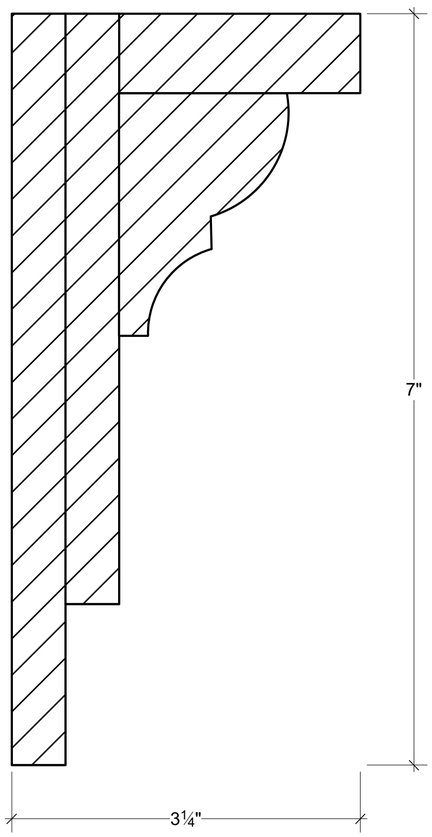

MOULDING DETAIL
FULL SCALE

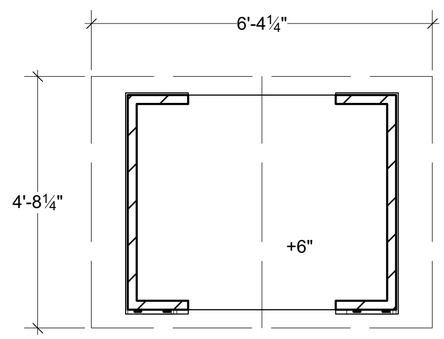

GUARD SHACK PLAN VIEW

GUARD SHACK

- INTERIOR IS VISIBLE AND WILL BE PAINTED
- BACK ARCH SHOULD HAVE DUVETYNE STAPLED TO IT

These drawings represent visual concept,and construction suggestions only. The designer is not an engineer and is not qualified to determine the structural appropriates of these designs. Contractors and suppliers are liable in that all work be accomplished in a workman like manner with attention to the most stringent applicable safety and fire codes. Any alterations must be approved by the designer prior to the commencement of construction.

AMERICA'S PREMIER LYRIC THEATER FESTIVAL
THE OHIO LIGHT OPERA

Freedlander Theatre

Iolanthe

DIRECTOR: Ted Christopher
DESIGNER: Kimberly Powers
DRAWN BY: Brandon M. Newton

SCALE: 1/2" - 1'-0"

SUBJECT: Detail - Guard Shack

SHEET #: Det-6 OF 5

DATE: 06/12/2018

Vectorworks Educational Version

Vectorworks Educational Version

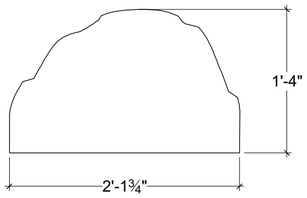

FRONT ELEVATION - ROCK A

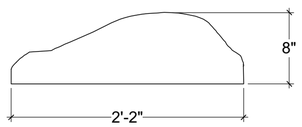

FRONT ELEVATION - ROCK B

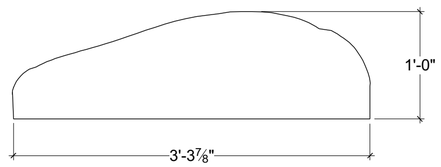

FRONT ELEVATION - ROCK C

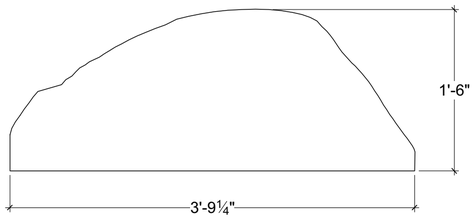

FRONT ELEVATION - ROCK D

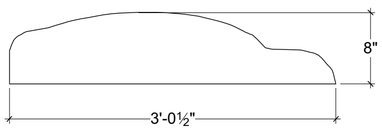

FRONT ELEVATION - ROCK E

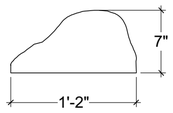

FRONT ELEVATION - ROCK F

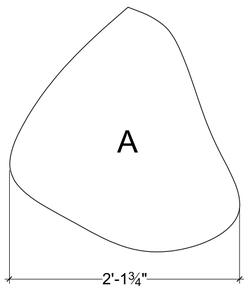

PLAN VIEW

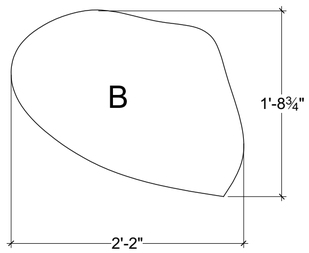

PLAN VIEW

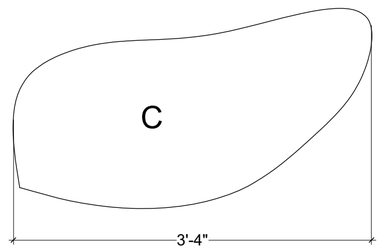

PLAN VIEW

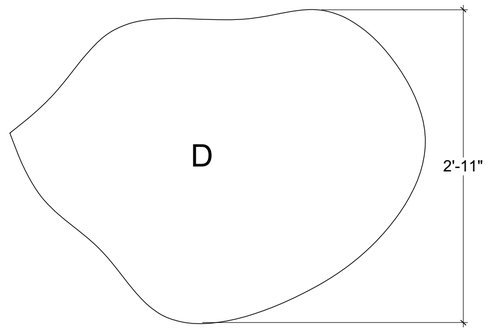

PLAN VIEW

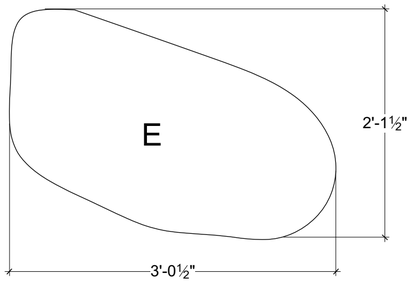

PLAN VIEW

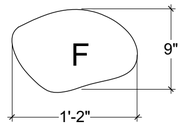

PLAN VIEW

ROCKS

- MUST BE SITTABLE AND STANDABLE
- CARVE FROM FOAM, ORGANIC APPEARANCE
- WILL BE PAINTED

These drawings represent visual concept,and construction suggestions only. The designer is not an engineer and is not qualified to determine the structural appropriates of these designs. Contractors and suppliers are liable in that all work be accomplished in a workman like manner with attention to the most stringent applicable safety and fire codes. Any alterations must be approved by the designer prior to the commencement of construction.

AMERICA'S PREMIER LYRIC THEATER FESTIVAL
THE OHIO LIGHT OPERA

Freedlander Theatre

Iolanthe

DIRECTOR: Ted Christopher
DESIGNER: Kimberly Powers
DRAWN BY: Brandon M. Newton

SCALE: 1" - 1'-0"

SUBJECT: Rocks

SHEET #: Prop-1 OF 1

DATE: 06/06/2018

Vectorworks Educational Version

Vectorworks Educational Version

MUSHROOM 1

- MUST BE SITTABLE
- CARVE FROM FOAM, ORGANIC APPEARANCE
- WILL BE PAINTED
- CAPS AND STEMS WILL HAVE JOINT COMPOUND ADDED FOR TEXTURE

MUSHROOM 1 RESEARCH IMAGE

MUSHROOM 2 RESEARCH IMAGE

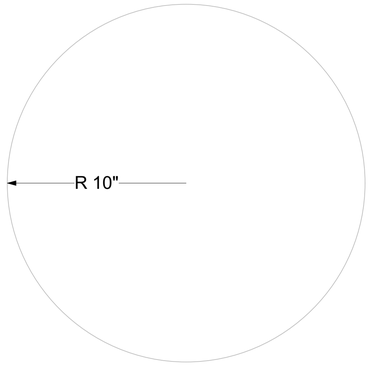

MUSHROOM 2 TOP VIEW

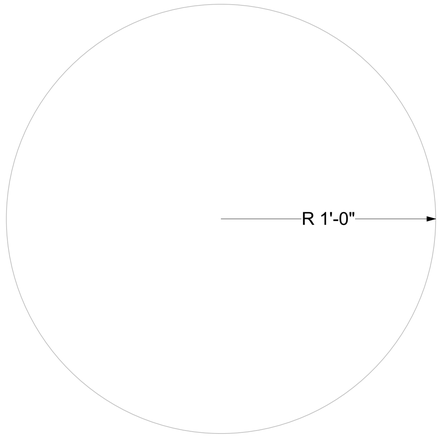

MUSHROOM 1 TOP VIEW

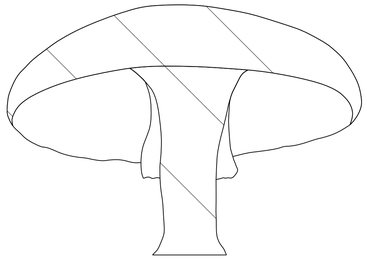

MUSHROOM 2 CL SECTION

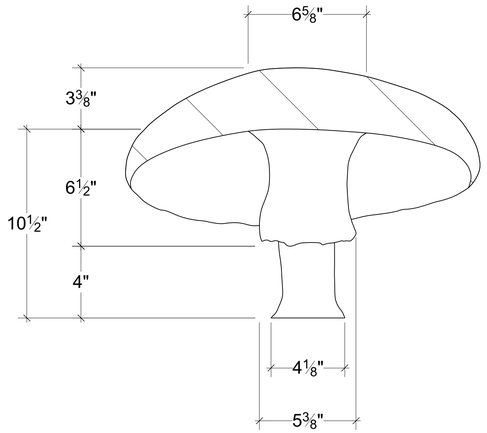

MUSHROOM 2 CAP SECTION
TO SHOW RING

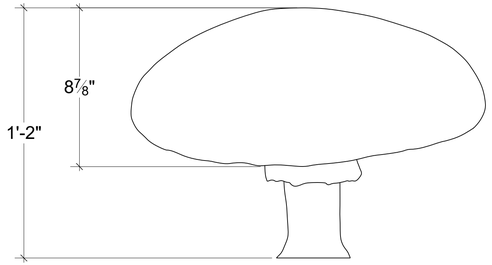

MUSHROOM 2 SIDE VIEW

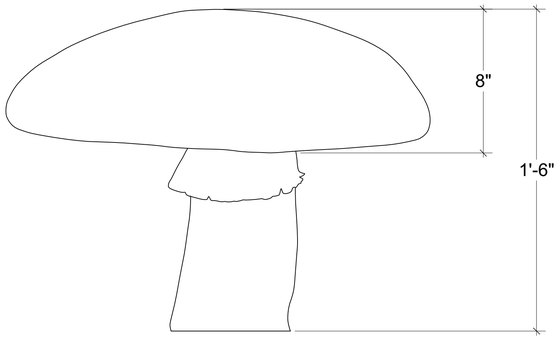

MUSHROOM 1 SIDE VIEW

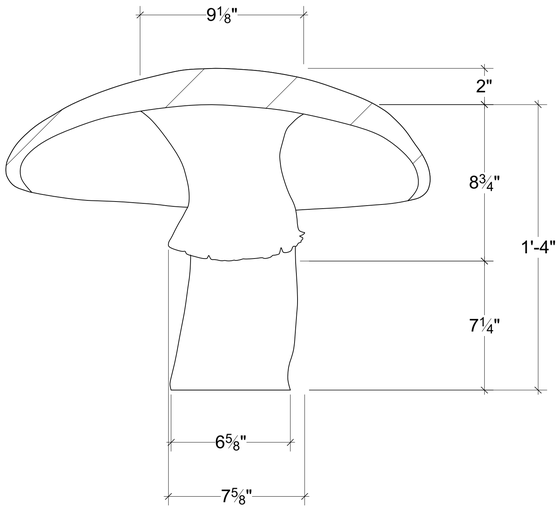

MUSHROOM 1 CAP SECTION
TO SHOW RING

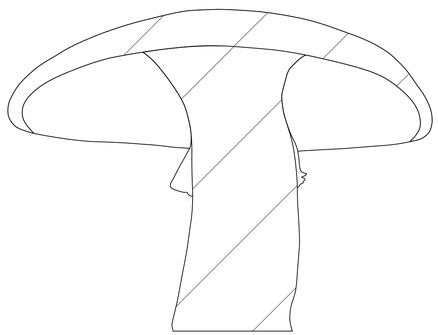

MUSHROOM 1 CL SECTION

These drawings represent visual concept and construction suggestions only. The designer is not an engineer and is not qualified to determine the structural appropriates of these designs. Contractors and suppliers are liable in that all work be accomplished in a workman like manner with attention to the most stringent applicable safety and fire codes. Any alterations must be approved by the designer prior to the commencement of construction.

AMERICA'S PREMIER LYRIC THEATER FESTIVAL
THE OHIO LIGHT OPERA

Freedlander Theatre

Iolanthe

DIRECTOR: Ted Christopher
DESIGNER: Kimberly Powers
DRAWN BY: Brandon M. Newton

SCALE: 3" - 1'-0"

SUBJECT: Mushrooms

SHEET #: Prop-2 OF 2

DATE: 06/06/2018

Vectorworks Educational Version